INSTRUCTIONS FOR BROILER/ROTISSERIE ASSEMBLY #455

(A) Frame and Handle Assembly - There is a front and back to the Frame and Handle Assembly. The back can always be determined, as the two vertical bars and spring latches (P) should always be located towards the rear of the unit.

(B) Aluminum Drip Tray - Unit slides in, on bottom cross bars of Handle.

(C) Stainless Steel Body - Drops into position. Make sure that plug receptacle (N) is lowered first under bar of Frame. The plug receptacle (N) should always be to the right as you look at the unit.

(D) Stainless Steel Cross Bar - This fits into position after the body is in position, and holds heating element at correct level.

(E) Heating Element - The two prongs fit through receptacle (N) and bracket ends drop into slots.

(F) Two-level Grill - Drops into position in the Stainless Steel Body.
When Rotisserie cooking, the Grill (F) is not necessary!

(G) Spit Support Brackets (Two) - One of the Spit Support Brackets holds the motor. This arm should always be located to the left of the Frame as you look at it. This means that the motor will hang properly without interference from the plug receptacle (N) which should be located to the right as you look at the unit.

(H) Motor Assembly - Specially designed heavy-duty motor for long life. Note inset (Q) to be sure motor fits properly on Spit Support Brackets.

(J) Spit Bar - The handle (L) and screw (M) and spit bar are easily assembled. Any screwdriver can do the job.

(K) Two Holding Meat Forks -

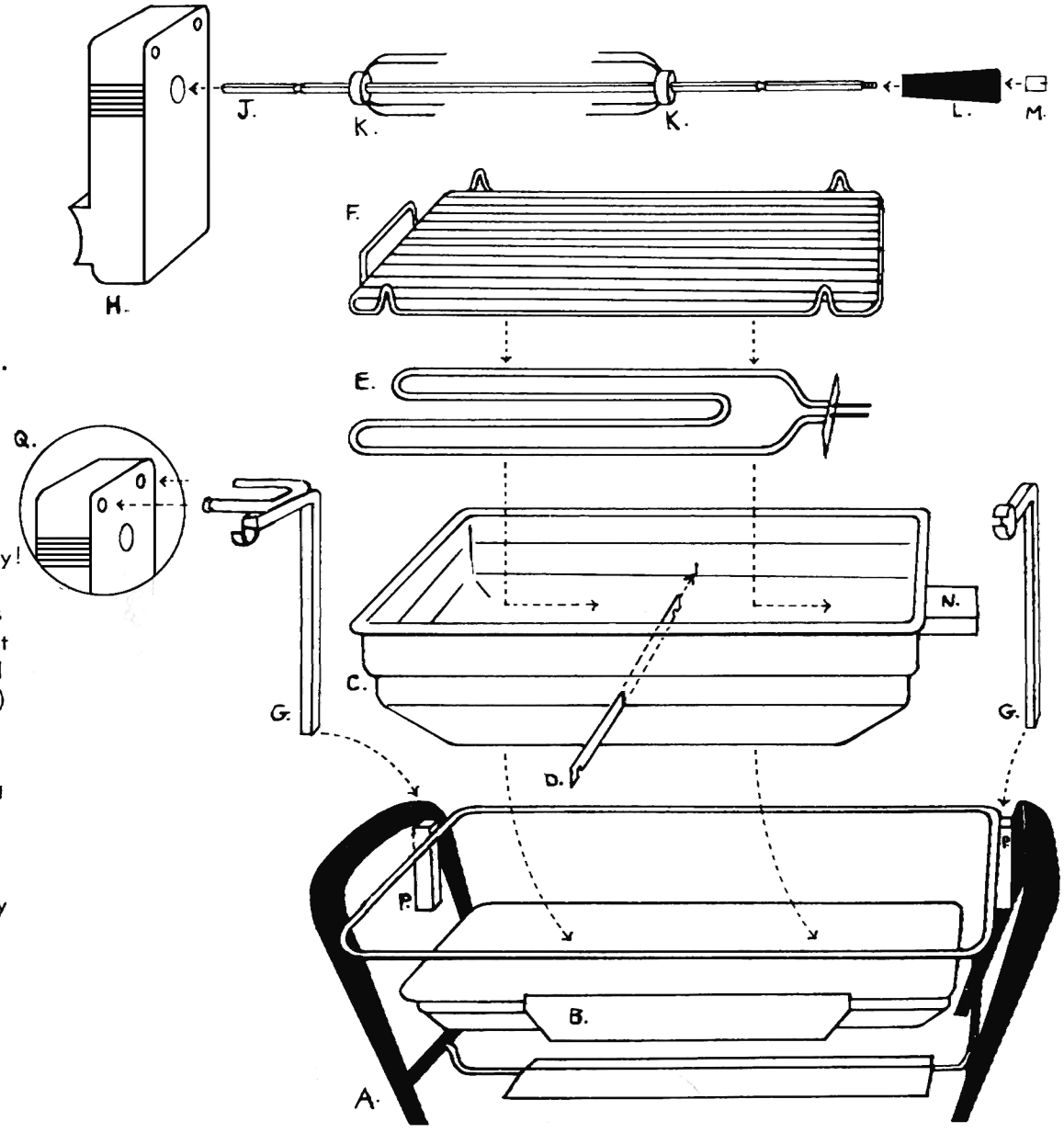

The cord set is not pictured in the above diagram as is the pronged spatula. Picture of the complete unit can be seen in the recipe book, included in the carton.

50M 10/62 BJ P-15-117